Gate Driver Unit 2EG01XBxN18N

■Overview

2EG01XBxN18N is a dual channel gate driver designed for SiC MOSFET power module.
This gate driver unit contains a built-in isolated DC/DC converter and gate drive circuit.
After mounting the gate resistors, It is ready to use by mounting it on the SiC MOSFET power module.

■Features

・Ideal for drive of SiC MOSFET Power module
・Gate voltage : +15V/-7V
・Gate resistor : Open (lead resistor mounting possible)
・Short circuit detection voltage : 9.5V(TYP)
・ALL-IN-ONE (Built-in isolated DC / DC converter and gate drive circuit)
・Low parasitic capacitance (12pF(TYP)) ; highly resistant to common-mode noise.
・Fast response : About 130nsec(typ)
・The isolation for primary-secondary signal used fast response isolator.
・Dielectric withstand voltage : AC5000V
・Insulation distance (clearance / creepage) : 12mm/16mm (As for Gate driver PCB) *Refer to P6 for details
・DC/DC converter input voltage : 13～28V
・Power supply for gate driver input voltage : 13～28V
・Signal input voltage : 3.3～15V or 15V
・Overload protection (DC/DC converter)
・Overheat protection (DC/DC converter)
・Desaturation protection (Gate drive circuit)
・Soft turn-off function (Gate drive circuit)
・Fault signal output function (Gate drive circuit)
・Under-voltage lockout(UVLO) (Gate drive circuit)
・Direct mode / Half bridge mode can be switched. (Gate drive circuit)
・Miller clamp function (Gate drive circuit)
・Safety standards : UL508(file no.E243511) (DC/DC converter only)
・Reinforced isolation according to IEC 60664-1 (IEC61800-5-1, IEC62477-1, IEC62109-1, etc.)
・UL compliant (UL1741, UL508, etc.)

■Application

Industrial inverter, power conditioner, etc.

■Module information

Part number	Signal input voltage	Miller clamp	Coating	Status
2EG01XBCN18N	3.3 to 15V	Yes	No	Active
2EG01XBDN18N	15V	Yes	No	Active

■Circuit Image

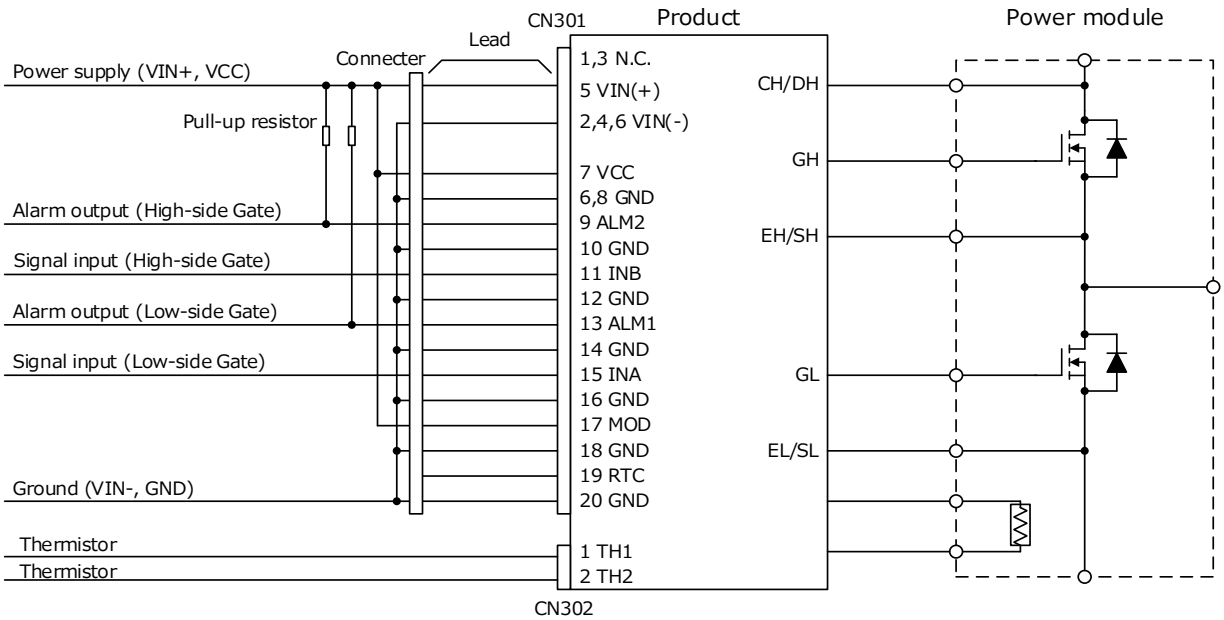

■Pin Connection

CN301 : RA-H201TD (JST)

Pin No.	Name	Function	Pin No.	Name	Function
1	N.C.	Unused	2	VIN(-)	Power supply for DC/DC converter(-)
3	N.C.	Unused	4	VIN(-)	Power supply for DC/DC converter(-)
5	VIN(+)	Power supply for DC/DC converter(+)	6	VIN(-)	Power supply for DC/DC converter(-)
7	VCC	Power supply for drive circuit	8	GND	Ground for drive circuit
9	ALM2	Alarm signal output 2 (High side)	10	GND	Ground for drive circuit
11	INB	Control input B (High side)	12	GND	Ground for drive circuit
13	ALM1	Alarm signal output 1 (Low side)	14	GND	Ground for drive circuit
15	INA	Control input A (Low side)	16	GND	Ground for drive circuit
17	MOD	Mode select	18	GND	Ground for drive circuit
19	RTC	Restart time of protection circuit control	20	GND	Ground for drive circuit

※Reference receptacle : RA-S201T (JST)

CN302 : B2B-ZR-SM4 (JST)

Pin No.	Name	Function
1	TH1	Thermistor connection
2	TH2	Thermistor connection

※Reference receptacle : ZHR-2 (JST)

Connection on the power module

Name	CH	Function
CH/DH	1	Drain connection, High side
GH	1	Gate connection, High side
EH/SH	1	Source connection, High side
GL	2	Gate connection, Low side
EL/SL	2	Source connection, Low side
T1	-	Thermistor connection
T2	-	Thermistor connection

■Internal Block Diagram

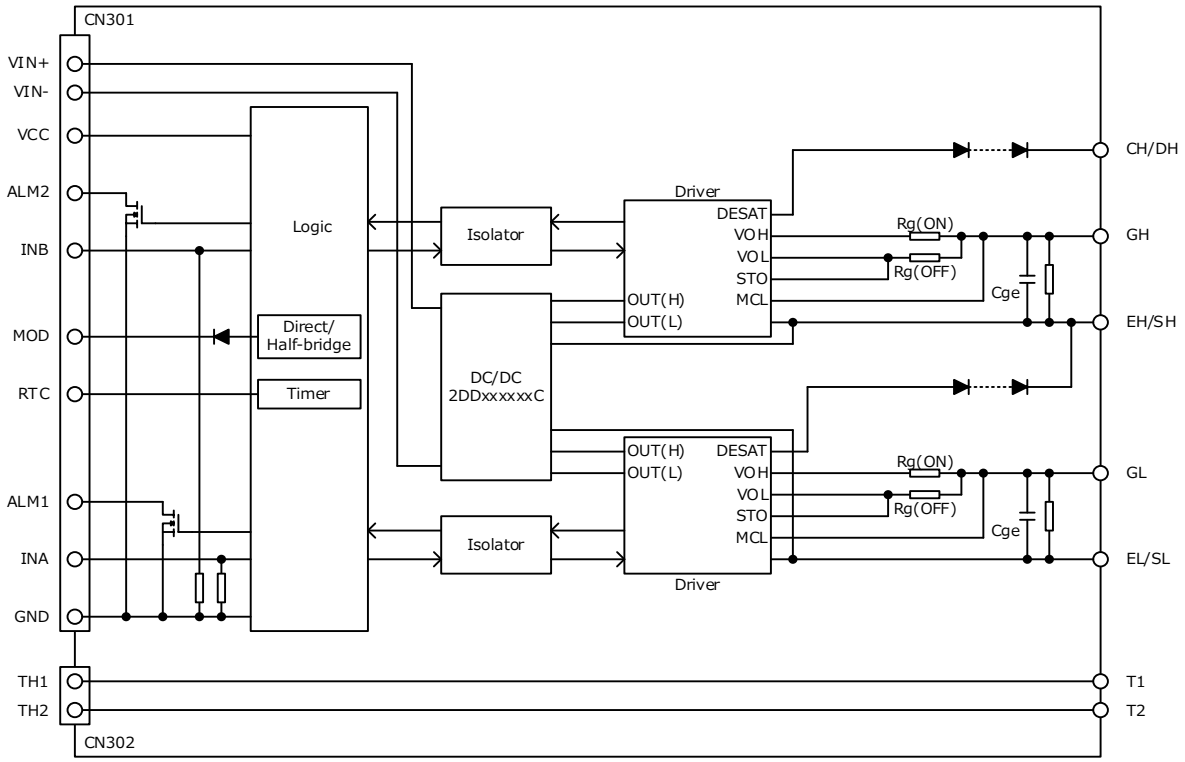

■I/O Condition Table

No.	Status	Input						Output				Note
		OUT(H)	CH/DH	EH/SH	MOD	INB	INA	ALM2	ALM1	GH	GL	
1	V_{OUT}UVLO	UVLO	X	X	X	X	X	L	L	L	L	Output state in UVLO (Vout < UVLOth)
2	G-S short	○	X	X	X	X	X	L	L	SD	SD	Output state in Gate-Source short
3	Normal operation	○	-	L	H	-	L	-	Hi-Z	-	L	Low side I/O state in direct mode (MOD pin H)
4		○	-	L	H	-	H	-	Hi-Z	-	H	
5		○	L	-	H	L	-	Hi-Z	-	L	-	High side I/O state in direct mode (MOD pin H)
6		○	L	-	H	H	-	Hi-Z	-	H	-	
7		○	L	L	L	L	X	Hi-Z	Hi-Z	L	L	I/O state in half-bridge mode (MOD pin L)
8		○	L	L	L	H	L	Hi-Z	Hi-Z	H	L	
9		○	L	L	L	H	H	Hi-Z	Hi-Z	L	H	
10	Short circuit detection (L)	○	-	Hi-Z	H	-	L	-	Hi-Z	-	L	I/O state during low side DESAT protection in direct mode
11		○	-	Hi-Z	H	-	H	-	L	-	L	
12		○	-	Hi-Z	L	H	L	-	Hi-Z	-	L	I/O state during low side DESAT protection in half-bridge mode
13		○	-	Hi-Z	L	H	H	-	L	-	L	
14	Short circuit detection (H)	○	Hi-Z	-	H	L	-	Hi-Z	-	L	-	I/O state during high side DESAT protection in direct mode
15		○	Hi-Z	-	H	H	-	L	-	L	-	
16		○	Hi-Z	-	L	H	H	Hi-Z	-	L	-	I/O state during high side DESAT protection in half-bridge mode
17		○	Hi-Z	-	L	H	L	L	-	L	-	

G-S short : Gate-Emitter short
X : Don't care
- : Specified in other items
○ : OUT(H) > UVLO, X : Don't care
SD : Shut down (Gate-Emitter short)

■Absolute Maximum Ratings

Item		Symbol	Min	Max	Unit	Conditions・Note
Input voltage for DC/DC converter		V_{IN}	-0.3	28	Vdc	Between VIN(+) to VIN(-)
Input voltage for Gate driver		V_{CC}	-0.3	28	Vdc	Between VCC to GND
Input-side signal voltage		V_{SG}	-0.3	V_{CC}+0.3 or 18 *	V	INA, INB *Whichever is less
		V_{MOD}	-0.3	28	V	MOD
		V_{RTC}	-0.3	5	V	RTC
Maximum gate current		I_{GPEAK}	-	43	A	
Switching frequency		F_{SW}	-	40	kHz	See the permissible frequency curve
Short circuit detection pin voltage		V_{SD}	0	1700	V	
Alarm signal output pin maximum voltage		V_{ALM}	-0.3	V_{CC}+0.3 or 28 *	V	ALM1,2 *Whichever is less
Input-side signal maximum current		I_{ALM}	-	5	mA	ALM1,2
Operating temperature range	V_{IN}=13.5-18V	T_{OP}	-40	85	℃	See the permissible frequency curve
	V_{IN}=18-26.4V	T_{OP}	-40	75	℃	
Operating humidity		RH_{OP}	20	95	%RH	No condensation
Storage temperature range		T_{STG}	-40	90	℃	
Storage humidity		RH_{STG}	5	95	%RH	No condensation

■Recommended Operating Conditions

Item	Symbol	Min	Max	Unit	Conditions・Note
Input voltage range for DC/DC converter	V_{IN}	13.5	26.4	Vdc	
Input voltage range for gate driver	V_{CC}	13.5	26.4	Vdc	
Driver circuit number	N	-	2	-	
Maximum gate charge	Q_G	-	5500	nC	*1
Switching frequency (Qg=5500nC)	F_{SW}	-	16	kHz	See the permissible frequency curve
MOD pin high input voltage	V_{MODH}	3.3	26.4	V	
MOD pin low input voltage	V_{MODL}	-0.3	0.5	V	
2EGxxxxCx1xN					
Logic high level input voltage	V_{SGH}	3.3	V_{CC}+0.3 or 16 *	V	INA, INB *Whichever is less
Logic low level input voltage	V_{SGL}	-0.3	0.5	V	INA, INB
Source current of control signal	I_{SG}	3.2	-	mA	INA, INB V_{SG}=15V
2EGxxxxDx1xN					
Logic high level input voltage	V_{SGH}	13	V_{CC}+0.3 or 16 *	V	INA, INB *Whichever is less
Logic low level input voltage	V_{SGL}	-0.3	0.5	V	INA, INB
Source current of control signal	I_{SG}	3.3	-	mA	INA, INB V_{SG}=15V

*1 If the gate charge exceeds the allowable value, the gate voltage at turn-on and turn-off will drop, which may affect the switching performance of the SiC MOSFET.

If you are considering using it under conditions other than the recommended conditions, please contact us.

■ Permissible frequency curve

Gate resistor power derating is not included.

Use the output power in a range with sufficient margin for the allowable power of the gate resistor.

Recommended resistor surface temperature : 120℃ or less.

Total gate charge (Qg) vs permissible frequency curve

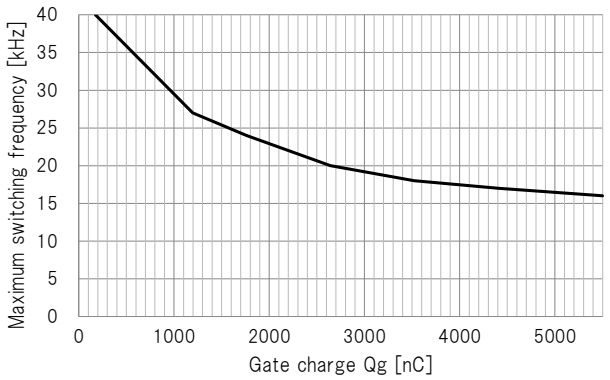

■ Electrical Specification (Vin=Vcc=15V.Ta=25℃, Unless otherwise specified)

Item		Symbol	Min	Typ	Max	Unit	Conditions・Note
DC/DC converter							
Start-up voltage		V_{START}	-	11.5	12.5	V	
Input current		I_{IN}	-	0.2	-	A	Fsw=12kHz / Test load: 106.8nF
Standby power		P_{STBY}	-	1.1	-	W	No load
Logic inputs for 2EGxxxxCx1xN							
Turn-on threshold		V_{SGH}	-	2	2.3	V	INA, INB / Guaranteed by design
Turn-off threshold		V_{SGL}	0.8	1	-	V	INA, INB / Guaranteed by design
Logic pull-down resistance		R_{SGD}	-	4700	-	Ω	INA, INB
Logic inputs for 2EGxxxxDx1xN							
Turn-on threshold		V_{SGH}	-	10	11.7	V	INA, INB / Guaranteed by design
Turn-off threshold		V_{SGL}	3.9	5	-	V	INA, INB / Guaranteed by design
Logic pull-down resistance		R_{SGD}	-	4500	-	Ω	INA, INB
Gate driver output							
Output pin voltage(High)		V_{OUTH}	14	15	16	V	No load
Output pin voltage(Low)		V_{OUTL}	-8	-7	-6	V	No load
Gate resistance		Rg(ON)	-	OPEN	-	Ω	No mounting / Lead resistor can be mounted.
		Rg(OFF)	-	OPEN	-		
Auxiliary gate capacitance		Cge	-	33	-	nF	
Delay time	Turn ON time	t_{PON}	-	130	-	ns	
	Turn OFF time	t_{POFF}	-	130	-	ns	
Dead time		t_{DEAD}	-	3	-	us	Half bridge mode

■Protection

Item	Symbol	Min	Typ	Max	Unit	Conditions・Note
DC/DC converter						
Overload protection	-	9.2	-	-	W	Auto recovery
Overheat protection	-	120	-	150	℃	Auto recovery, Internal temperature
Gate driver						
Output voltage(H) UVLO OFF voltage	$V_{UVLOOHH}$	13.2	13.5	13.8	V	Guaranteed by design
Output voltage(H) UVLO ON voltage	$V_{UVLOOHL}$	12.2	12.5	12.8	V	Guaranteed by design
Short circuit detection voltage	V_{SD}	-	9.5	-	V	
Short circuit detection filter time	$t_{SHORTFIL}$	-	1.5	-	us	Collector open
Alarm signal output L voltage	V_{ALML}	-	-	0.5	V	I_{ALM}=5mA
Alarm signal response time	t_{ALM}	-	0.2	-	us	
Restart time	$t_{RESTART}$	-	110	-	ms	
Soft turn-off resistance	R_{STO}	-	2.2	-	Ω	
Soft turn-off duration	t_{STO}	-	4	-	us	
Miller clamp voltage	V_{CLAMP}	-	1.2	-	V	I_{CLAMP}=500mA, Guaranteed by design
Miller clamp ON threshold voltage	V_{CLPON}	-	V_{GL}+2	-	V	

■Insulation

Item	Specification	Conditions・Note
Between Input-Output		
Dielectric withstand voltage	AC5000V	1min, Cutoff 2mA
Insulation resistance	100MΩ or more	DC500V
Partial discharge extinction voltage	1768Vpeak or more	According to EN50178/IEC 60270
Common-mode transient immunity (CMTI)	70kV/us	
Minimum clearance distances	12mm	As for Gate driver PCB
Minimum creepage distances	16mm	
Between Input-Output / SiC MOSFET device terminal - Gate driver PCB Input side		
Minimum clearance distances	11mm	MITSUBISHI / NX package
Minimum creepage distances	12mm	
Between CH1-CH2		
Minimum clearance distances	7mm	Excluding electrical connections point
Minimum creepage distances	12mm	

■Storage Conditions

Item	Min	Max	Unit	Conditions・Note
Storage temperature	-25	60	℃	A packing state

※If you want to use past the long period there is a concern that the solder non-wetting by terminal oxidation to occur.
Therefore, please use from taking enough tests.

■Recommended Soldering Condition

・Soldering condition of hand work : 360℃(MAX) Less than 5sec

■Recommended gate resistance value

Item	Symbol	Min	Max	Unit	Conditions・Note
Recommended gate resistance value	Rg(ON)	1.6	8	Ω	FMF600DXE-24BN (Mitsubishi)
	Rg(OFF)	1.2	8		
	Rg(ON)	1.2	6	Ω	FMF600DXE-34BN (Mitsubishi)
	Rg(OFF)	4.7	6		

■Usage Cautions

- Always mount fuse on the plus side of input for ensuring safety because the fuse is not built-in the product.
  Please select the fuse considering conditions such as steady current, inrush current, and ambient temperature.
  When using a fuse having large rated current or high capacity input electrolytic condenser, by combining another converter and input line and input electrolytic condenser, fuse may not blow off in the case of abnormality.
  Do not combine high voltage line and fuse.

- Make sure the rise/fall time of the input signal is 500ns or less.
  Also, keep input wiring as far as possible from noise sources.
  To prevent malfunction due to noise, a high signal voltage within the recommended range is recommended.

- Please do not apply excessive stress to this product when attaching to SiC MOSFET power module.

- This product has DESAT protection for arm short circuit and load short circuit protection.
  However, even if this protection works, the SiC MOSFET may be damaged if abnormally high current occurs due to SiC MOSFET's characteristics variations or the load short-circuit mode during parallel operation.
  To ensure safety, be sure to check the short-circuit current at the unit in which this product is integrated, and evaluate whether it can protect under the condition that there is no damage to the SiC MOSFET.

- When ALM outputs Low, it may cause abnormality to the system, so confirm the abnormality immediately.

- When using with FMF600DXE-34BN (Mitsubishi), do not use the desaturation protection function.
  The DESAT function can be disabled by mounting a 0Ω (1608 size) in the area enclosed in the red frame in the figure below.
  Since the protection function will not be activated when an overcurrent occurs due to an arm short circuit or load short circuit in the power semiconductor, please implement safety measures on the device side.

  [2EG01XBxN18N　bottom view]

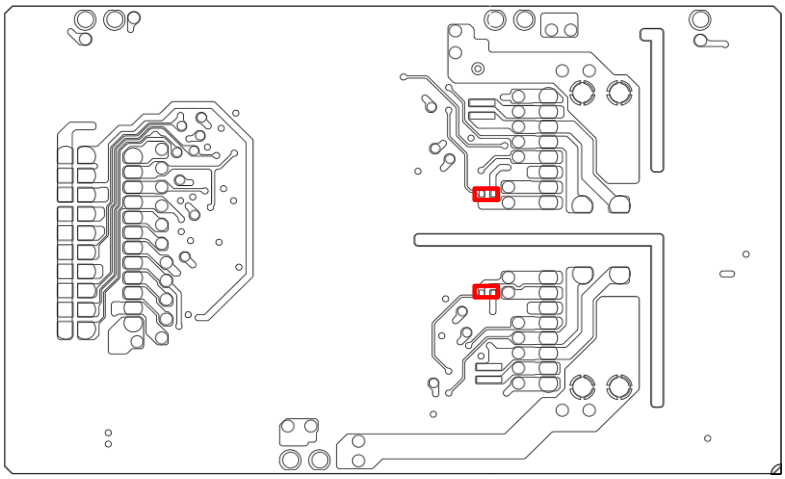

■Outline Dimensional Drawing

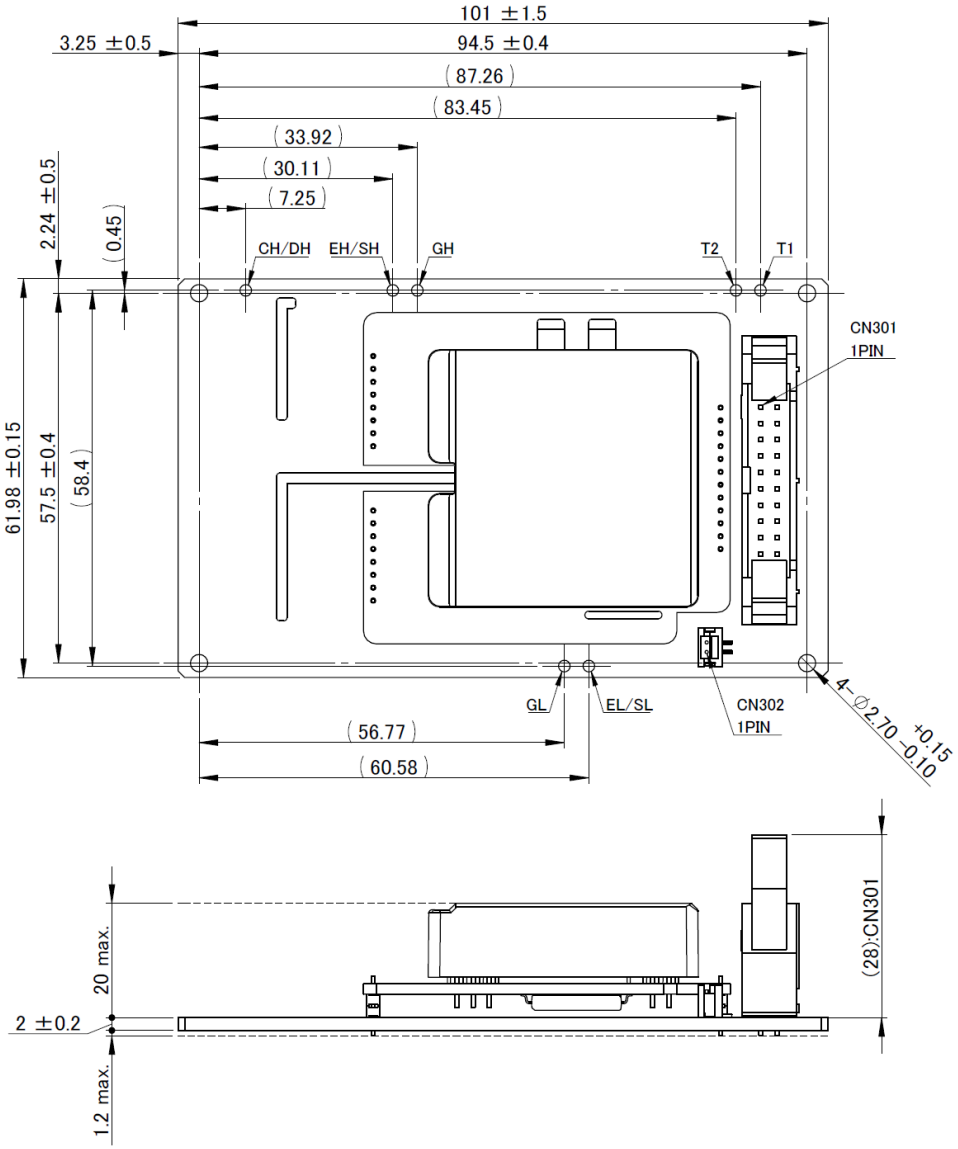

Unit: mm

Note: 1. The dimensional tolerance without directions is ± 0.5mm.

■Product Weight

72.0g(typ)

■Important Notice

- This information and product are subject to change without prior notice for the purpose of improvements, etc.
  Ensure that you are in possession of the most up-to-date information when using this product.

- The operation examples and circuit examples shown in this document are for reference purposes only, and TAMURA Corporation disclaims all responsibility for any violations of industrial property rights, intellectual property rights and any other rights owned by TAMURA Corporation or third parties that these may entail.

- The circuit examples and part constants listed in this document are provided as reference for the verification of characteristics. You are to perform design, verification, and judgment at your own responsibility, taking into account the various conditions.

- TAMURA has evaluated the efficiency and performance of this product in a usage environment determined by us.
  Depending on your usage environment or usage method, there is the possibility that this product will not perform sufficiently as shown in the specifications, or may malfunction.
  When applying this product to your devices or systems, please ensure that you conduct evaluations of their state when integrated with this product. You are responsible for judging its applicability.
  TAMURA bears no responsibility whatsoever for any problems with your devices,
  systems or this product which are caused by your usage environment or usage method.

- TAMURA Corporation constantly strives to improve quality and reliability, but malfunction or failures are bound to occur with some probability in power products. To ensure that failures do not cause accidents resulting in injury or death, fire accidents, social damage, and so on, you are to thoroughly verify the safety of their designs in devices and/or systems, at your own responsibility.

- This product is intended for use in consumer electronics (electric home appliances, business equipment, Information equipment, communication terminal equipment, measuring devices, and so on.) If considering use of this product in equipment or devices that require high reliability (medical devices, transportation equipment, traffic signal control equipment, fire and crime prevention equipment, aeronautics and space devices, nuclear power control, fuel control, in-vehicle equipment, safety devices, and so on), please consult a TAMURA sales representative in advance. Do not use this product for such applications without written permission from TAMURA Corporation.

- This product is intended for use in environments where consumer electronics are commonly used.
  It is not designed for use in special environments such as listed below, and if such use is considered,
  you are to perform thorough safety and reliability checks at your own responsibility.
  - Use in liquids such as water, oil, chemical solutions, or organic solvents, and use in locations where the product will be exposed to such liquids.
  - Use that involves exposure to direct sunlight, outdoor exposure, or dusty conditions.
  - Use in locations where corrosive gases such as salt air, C12, H2S, NH3, SO2, or NO2, are present.
  - Use in environments with strong static electricity or electromagnetic radiation.
  - Use that involves placing inflammable material next to the product.
  - Use of this product either sealed with a resin filling or coated with resin.
  - Use of water or a water soluble detergent for flux cleaning.
  - Use in locations where condensation is liable to occur.

- This product is not designed to resist radiation.

- This product is not designed to be connected in series or parallel.
  Do not operate this product in a series, parallel, or N+1 redundant configuration.

- Do not use or otherwise make available the TAMURA products or the technology described in this document for any military purposes, including without limitation, for the design, development, use, stockpiling or manufacturing of mass destruction weapons (e.g. nuclear, chemical, or biological weapons or missile technology products).
  When exporting and re-exporting the products or technology described in this document, you should comply with the applicable export control laws and regulations and follow the procedures required by such laws and regulations including, without limitation,
  Japan -Foreign Exchange and Foreign Trade Control Law and U.S.- Export Administration Regulations.
  The TAMURA products and related technology should not be used for or incorporated into any products or systems whose manufacture, use, or sale is prohibited under any applicable domestic or foreign laws or regulations.

- Please contact your TAMURA sales office for details as to environmental matters such as the RoHS compatibility of product.
  Please use TAMURA products in compliance with all applicable laws and regulations that regulate the inclusion or use of controlled substances, including without limitation, the EU RoHS Directive.
  TAMURA assumes no liability for damages or losses occurring as a result of your noncompliance with applicable laws and regulations.

- TAMURA assumes no liability for damages or losses incurred by you or third parties as a result of unauthorized use of TAMURA products.

- This document and any information herein may not be reproduced in whole or in part without prior written permission from TAMURA.